HYDRA-TECH PUMPS

4” WATER DRIVEN HYDRAULIC SUBMERSIBLE TRASH PUMP

MODELS

S4TW (Aluminum Body)

S4TWDI (Ductile Iron Body)

4” (55 mm) Discharge

A water pump driven by water, the S4TW is designed to operate with water based hydraulic fluids or even 100% clean fresh water. This is perfect for mining applications and pumping in environmentally sensitive areas. Good solids handling and choice of casing materials makes this a truly versatile pump.

CE

FEATURES

- Safe Variable Speed Water Hydraulic Drive can be used where electric power is hazardous or impractical or when oil hydraulics is not an option.
- Stainless Steel Axial Piston hydraulic motor
- 2-Vane Channel Impeller (will pass 3" (75 mm) semi-solids)
- Dual bearing supported shaft
- Bio-oil Lubricated Seals (can run dry)
- Can be bolted directly into a pipeline
- Operates with our water power units or other water hydraulic power sources capable of flows to 10.5 GPM
- Stainless Steel model available

SPECIFICATIONS

WEIGHT: S4TW	82 lbs. (37 kg)
S4TWDI	140 lbs. (63 kg)
HEIGHT:	21-1/2” (55 cm)
WIDTH (@ widest point):	19-1/2" (50 cm)
DISCHARGE:	4" NPT(F)
INLET FLANGE:	4", 125# ASA
SOLIDS HANDLING:	3" (75 mm)
HOSE PORTS:	3/4" NPT
PUMP BODY: S4TW	Aluminum
S4TWDI	Ductile Iron
IMPELLER:	Ductile Iron
SHAFT:	Stainless Steel
SHAFT SEAL:	Carbon/Ceramic (Std.)
	Silicon Carbide (Opt.)
ELASTOMERS:	Buna N (Std)
HYDRAULIC FLUIDS:	Water and water based fluids
INPUT FLOW:	Max. 10.5 GPM (40 LPM)
INPUT PRESSURE:	Max. Cont. 2400 PSI (160 Bar)

D0516

Specifications are subject to change without notice

HYDRA-TECH PUMPS

167 Stock Street, Nesquehoning, PA 18240 **Phone:** 570-645-3779 **Fax:** 570-645-4061
Website: www.hydra-tech.com **E-Mail:** htpump@hydra-tech.com

Model S4TW Overall Dimensions

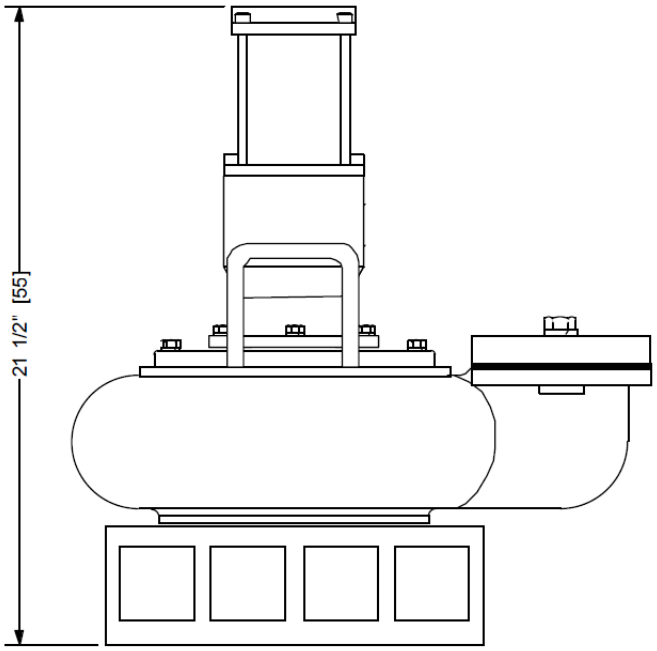

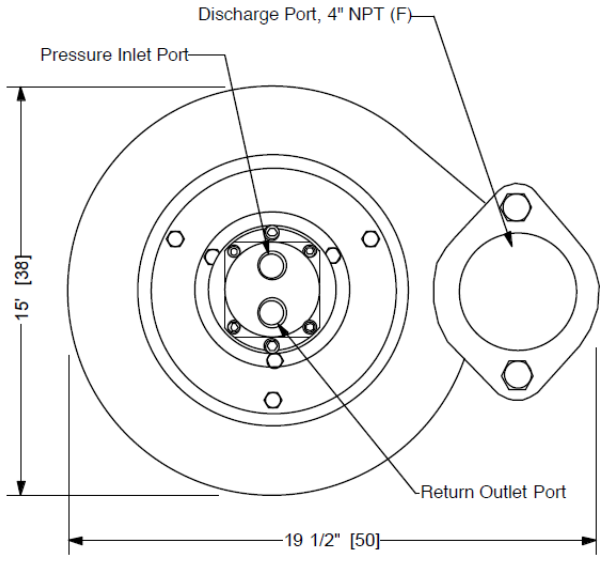

S4TW Typical Performance

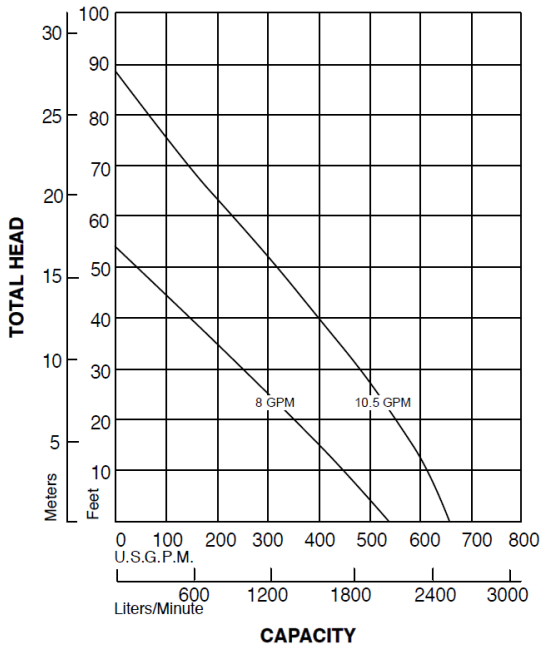

Curves are based on pumping water at 60°F. For performance curves other than shown above, consult factory.

HYDRA-TECH PUMPS
Since 1977

167 Stock Street, Nesquehoning, PA 18240 **Phone:** 570-645-3779 **Fax:** 570-645-4061
Website: www.hydra-tech.com **E-Mail:** htpump@hydra-tech.com